Chapter 4

# Design of Reinforced Concrete Columns

## 4.0 NOTATION

| | |
|---|---|
| $a_x$ | Deflection in column due to slenderness producing additional moment about $x$-axis |
| $a_y$ | Deflection in column due to slenderness producing additional moment about $y$-axis |
| $A_c$ | Net area of concrete in a column cross-section |
| $A_{sc}$ | Total area of steel in a column cross-section |
| $A_{sx}$ | Area of steel in tension to resist bending about $x$-axis |
| $A_{sy}$ | Area of steel in tension to resist bending about $y$-axis |
| $b$ | Width of rectangular column section – dimension perpendicular to $y$-axis |
| $b'$ | Effective depth of tensile steel reinforcement resisting moment about $y$-axis |
| $c$ | Coefficient of torsional stiffness |
| $C$ | Torsional stiffness |
| $d$ | Effective depth of tensile reinforcement |
| $E_c$ | Modulus of elasticity of concrete |
| $E_s$ | Modulus of elasticity of steel |
| $f_y$ | Characteristic yield strength of steel |
| $f_{cu}$ | Characteristic cube strength of concrete at 28 days |
| $F$ | Coefficient for calculation of cracked section moment of inertia |
| $G$ | Shear modulus |
| $h$ | Overall depth of rectangular column section – dimension perpendicular to $x$-axis |
| $h'$ | Effective depth to tensile steel reinforcement resisting moment about $x$-axis |
| $h_s$ | Diameter to centreline of reinforcement in a circular column |
| $h_{max}$ | Maximum overall dimension of a rectangular concrete section |
| $h_{min}$ | Minimum overall dimension of a rectangular concrete section |
| $I$ | Moment of inertia |
| $K$ | Factor governing deflection of column due to slenderness |
| $l_e$ | Effective height of column |
| $l_o$ | Clear height of column |
| $l_{ex}$ | Effective height for consideration of slenderness about $x$-axis |
| $l_{ey}$ | Effective height for consideration of slenderness about $y$-axis |
| $m$ | Modular ratio $= E_s/E_c$ |
| $M$ | Applied bending moment on a section |

| | |
|---|---|
| $M_x$ | Applied bending moment about $x$-axis |
| $M_y$ | Applied bending moment about $y$-axis |
| $M'_x$ | Modified bending moment about $x$-axis to account for biaxial bending |
| $M'_y$ | Modified bending moment about $y$-axis to account for biaxial bending |
| $M_{\text{add}\,x}$ | Additional moment about $x$-axis due to slenderness |
| $M_{\text{add}\,y}$ | Additional moment about the $y$-axis due to slenderness |
| $N$ | Axial load on column |
| $N_{\text{uz}}$ | Design ultimate capacity of a section subjected to axial load only |
| $N_{\text{bal}}$ | Design axial load capacity of a balanced section ($=0.25f_{\text{cu}}bd$) |
| $p$ | Percentage of tensile reinforcement |
| $p'$ | Percentage of compressive reinforcement |
| $p_x$ | Percentage of tensile reinforcement to resist moment about $x$-axis |
| $p_y$ | Percentage of tensile reinforcement to resist moment about $y$-axis |
| $T$ | Applied torsion |
| $v_x$ | Shear stress in concrete due to bending about $x$-axis |
| $v_y$ | Shear stress in concrete due to bending about $y$-axis |
| $v_{\text{c}x}$ | Design concrete shear stress in concrete due to bending about $x$-axis ($\text{N/mm}^2$) |
| $v_{\text{c}y}$ | Design concrete shear stress in concrete due to bending about $y$-axis ($\text{N/mm}^2$) |
| $V_x$ | Shear force in concrete column due to bending about $x$-axis |
| $V_y$ | Shear force in concrete column due to bending about $y$-axis |
| $\beta$ | Coefficient to determine effective height of a column |
| $\beta$ | Coefficient to determine modified bending moments in biaxial bending |
| $\phi$ | Diameter of reinforcing bar or equivalent diameter of a group of bars |

## 4.1 ANALYSIS OF COLUMNS

### 4.1.1 Moment of inertia

See Section 2.1.3.

### 4.1.2 Modulus of elasticity

See Section 2.1.4.

### 4.1.3 Shear modulus

See Section 2.1.6.

*Note:* In normal framed construction Torsional Rigidity of RC columns may be ignored in the analysis and the torsional stiffness may be given a very small value in the computer analysis. Torsional rigidity becomes important only where torsion is relied on to carry the load as in curved beams.

### 4.1.4 Poisson's ratio

See Section 2.1.7.

### 4.1.5 Shear area

See Section 2.1.8.

### 4.1.6 Thermal strain

See Section 2.1.9.

### 4.1.7 Effective heights

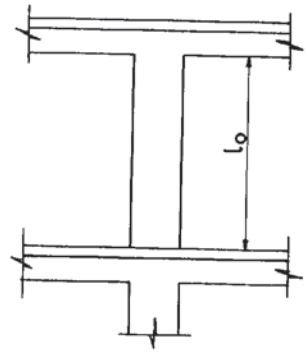


**SK 4/1** Effective height of column.

*Braced*: All horizontal loads carried by shear walls or bracing system.
*Unbraced*: Horizontal loads carried by columns as parts of frame structure.

$$l_e = \beta l_o$$

where $l_e$ = effective height
$l_o$ = clear height
$\beta$ = values given in Tables 4.1 and 4.2.

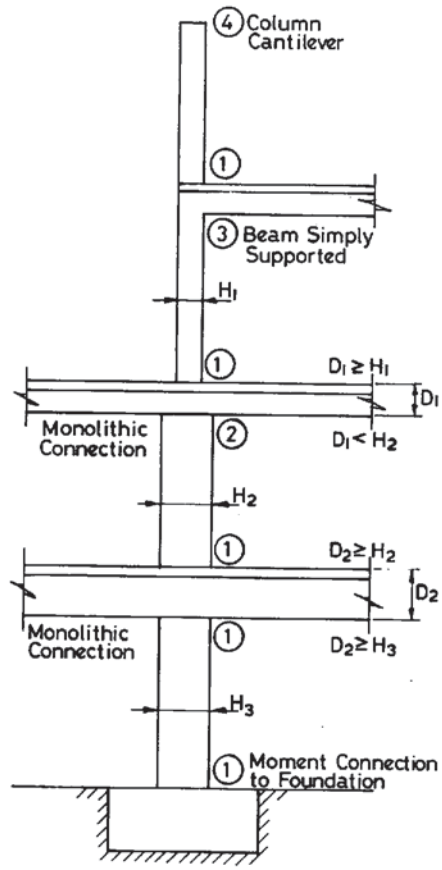


**SK 4/2** Column end conditions.

**Table 4.1** Values of β for braced columns.

| End condition at top | End condition at bottom | | |
|---|---|---|---|
| | 1 | 2 | 3 |
| 1 | 0.75 | 0.80 | 0.90 |
| 2 | 0.80 | 0.85 | 0.95 |
| 3 | 0.90 | 0.95 | 1.00 |

**Table 4.2** Values of β for unbraced columns.

| End condition at top | End condition at bottom | | |
|---|---|---|---|
| | 1 | 2 | 3 |
| 1 | 1.2 | 1.3 | 1.6 |
| 2 | 1.3 | 1.5 | 1.8 |
| 3 | 1.6 | 1.8 | – |
| 4 | 2.2 | – | – |

*Note:* Foundations of columns designed to carry moments may be considered as end condition 1 for the column.

### 4.1.8 Analysis of columns

Find the following internal forces by analysis:

(1) Bending moments about principal axes: $M_x$ and $M_y$
(2) Shear forces about principal axes: $V_x$ and $V_y$
(3) Deflections at critical points: $\delta$
(4) Rotations at joints (if required): $\theta$
(5) Torsions (if relevant): $T$
(6) Direct axial loads: $N$

Use a general-purpose 2-D or 3-D skeletal member suite of a computer software for the analysis, if required.

## 4.2 LOAD COMBINATIONS

### 4.2.1 General rules

The following load combinations and partial load factors should be used in carrying out the analysis of columns:

$LC_1$: $1.4DL + 1.6LL + 1.4EP + 1.4WP$
$LC_2$: $1.0DL + 1.4EP + 1.4WP$
$LC_3$: $1.4DL + 1.4WL + 1.4EP + 1.4WP$
$LC_4$: $1.0DL + 1.4WL + 1.4EP + 1.4WP$
$LC_5$: $1.2DL + 1.2LL + 1.2WL + 1.2EP + 1.2WP$

*Note:* Load combinations $LC_2$ and $LC_4$ should be considered only when the effect of dead and live load are considered to be beneficial.

where $DL$ = dead load
$LL$ = live load or imposed load
$WL$ = wind load
$WP$ = water pressure
$EP$ = earth pressure.

The general principle of load combination is to leave out the loads which have beneficial effect. If the load is of a permanent nature, like dead load, earth load or water load, use the partial load factor of 1 for that load which produces a beneficial rather than adverse effect. This rule of combination will be used for design as well as for the check of stability of structure.

*Note:* No reduction or redistribution of loads is allowed from the columns.

### 4.2.2 Exceptional loads

See Section 2.2.4.

## 4.3 STEP-BY-STEP DESIGN PROCEDURE FOR COLUMNS

### 4.3.1 Rectangular columns

***Step 1*** ***Analysis***

Moments, shear forces and axial forces should be determined manually or using computer software. Additional moments induced by deflection of slender columns are found in Step 5. For braced columns which are assumed to carry vertical loads only, a nominal eccentricity of vertical loads equal to 0.05 times the overall dimension in the plane of bending not exceeding 20 mm should be considered. For biaxial bending, minimum eccentricity should be considered about one axis at a time.

***Step 2*** ***Check slenderness of column***

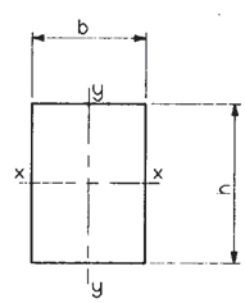


**SK 4/3** Section through a column.

Find $l_{ex}/h$ and $l_{ey}/b$.

See Section 4.1.7 for the determination of effective heights $l_{ex}$ and $l_{ey}$.

*Note:* For short columns both ratios should be less than 15 for braced and 10 for unbraced.

For columns generally, $l_o \leq 60b$

For cantilever columns, $l_o \leq 100b^2/h \leq 60b$

***Step 3*** ***Determination of cover***
Determine cover required to reinforcement, as per Tables 11.6 and 11.7.

***Step 4*** ***Design of short columns***

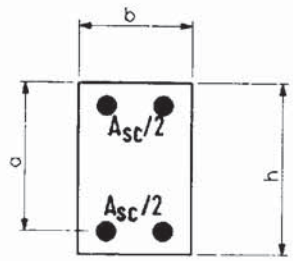


**SK 4/4** Symmetrically reinforced column.

***(1) No moment from analysis***
Select reinforcement size and number.

Find $N = 0.4f_{cu}A_c + 0.75A_{sc}f_y$

where $A_c$ = net area of concrete = $bh - A_{sc}$

Check $N >$ applied direct load

***(2) Column supporting continuous beams where analysis does not allow for framing into columns (no moment in column)***

Find $N = 0.35f_{cu}A_c + 0.67A_{sc}f_y$

Check $N >$ applied direct load

***(3) Column subjected to uniaxial moment and direct load***
Determine $d/h$ corresponding to cover found in step 3.

Find $e = M/N$ and then $e/h$.

Select appropriate Table from Tables 11.8 to 11.17 corresponding to $f_{cu}$, and $d/h$.
Calculate $N/bh$.
Find from appropriate Table the value of $p$ which satisfies the calculated $N/bh$ against the $e/h$ due to applied moment. From $p$ calculate $A_{sc}$.

Find $A_{sc}$.

*Note:* For symmetrically reinforced columns as designed above, the total area of steel should be divided by 2 and placed at the two opposite faces of the column in relation to the axis about which the moment is applied. More reinforcement may be necessary at the other two faces from other considerations. The total percentage of reinforcement should be below 6%.

***Step 5 Design of slender columns***

**Table 4.3** Summary of column additional moments.

| Column type | Bending about major axis only | Bending about minor axis only | Bending about both axes |
|---|---|---|---|
| Braced | $a_{ux} = \beta_a Kh$ | $a_{uy} = \beta_a Kb$ | $a_{ux} = \beta_{ax} Kh$ |
| $15 < \frac{l_{ex}}{h} \leq 20$ | $\beta_{ax} = \frac{1}{2000}\left(\frac{l_{ex}}{b}\right)^2$ | $\beta_{ay} = \frac{1}{2000}\left(\frac{l_{ey}}{b}\right)^2$ | $\beta_{ax} = \frac{1}{2000}\left(\frac{l_{ex}}{h}\right)^2$ |
| $15 < \frac{l_{ey}}{b} \leq 20$ | $M_{addx} = Na_u$ | | $M_{addx} = Na_{ux}$ |
| | $M_x = M_{xi} + {}^*M_{addx}$ | $M_{addy} = Na_{uy}$ | $M_x = M_{xi} + {}^*M_{addx}$ |
| $\frac{h}{b} < 3$ | $K = \frac{N_{uz} - N}{N_{uz} - N_{bal}} \leq 1$ | $M_y = M_{yi} + {}^*M_{addy}$ | |
| Unbraced | | | $a_y = \beta_{ay} Kb$ |
| $10 < \frac{l_{ex}}{h} \leq 20$ | $N_{uz} = 0.45 f_{cu} A_c + 0.87 f_y A_{sc}$ | | $\beta_{ay} = \frac{1}{2000}\left(\frac{l_{ey}}{b}\right)^2$ |
| $10 < \frac{l_{ey}}{b} \leq 20$ | $N_{bal} = 0.25 f_{cu} bd$ | | $M_{addy} = Na_{uy}$ |
| $\frac{h}{b} < 3$ | | | $M_y = M_{yi} + {}^*M_{addy}$ |
| Braced and unbraced | $a_{ux} = \beta_{ax} Kh$ | $a_{ux} = \beta_{ax} Kh$ | $a_{ux} = \beta_{ax} Kh$ |
| $20 < \frac{l_{ex}}{h}$ and/or | $\beta_{ax} = \frac{1}{2000}\left(\frac{l_{ex}}{b}\right)^2$ | $\beta_{ax} = \frac{1}{2000}\left(\frac{l_{ex}}{h}\right)^2$ | $\beta_{ax} = \frac{1}{2000}\left(\frac{l_{ex}}{h}\right)^2$ |
| | $M_{addx} = Na_{ux}$ | $M_{addx} = Na_{ux}$ | $M_{addx} = Na_{ux}$ |
| $20 < \frac{l_{ey}}{b}$ and/or | $M_x = M_{xi} + {}^*M_{addx}$ | $M_x = M_{addx}$ | $M_x = M_{xi} + {}^*M_{addx}$ |
| | $a_{uy} = \beta_{ay} Kb$ | $a_{uy} = \beta_{ay} Kb$ | $a_y = \beta_{ay} Kb$ |
| $\frac{h}{b} \geq 3$ | $\beta_{ay} = \frac{1}{2000}\left(\frac{l_{ey}}{b}\right)^2$ | $\beta_{ay} = \frac{1}{2000}\left(\frac{l_{ey}}{b}\right)^2$ | $\beta_{ay} = \frac{1}{2000}\left(\frac{l_{ey}}{b}\right)^2$ |
| | $M_{addy} = Na_{uy}$ | $M_{addy} = Na_{uy}$ | $M_{addy} = Na_{uy}$ |
| | $M_y = M_{addy}$ | $M_y = M_{yi} + {}^*M_{addy}$ | $M_y = M_{yi} + {}^*M_{addy}$ |

* The addition of $M_{add}$ will be done following sketches SK4/5 and SK4/6 as appropriate. $M_{xi}$ is the initial moment and $M_x$ is the final moment about $x$-axis. $M_{addx}$ is the additional moment due to slenderness.

For unbraced columns at any storey find $a_u$ for all columns in any orthogonal direction and then find $a_{uav}$ given by

$$a_{uav} = \frac{\Sigma a_u}{n} \text{ where } n = \text{number of columns.}$$

Find additional moment for all columns using $a_{uav}$ as deflection.

If any value of $a_u$ for any individual column at a level is twice $a_{uav}$, then discard that column from the calculation of $a_{uav}$.

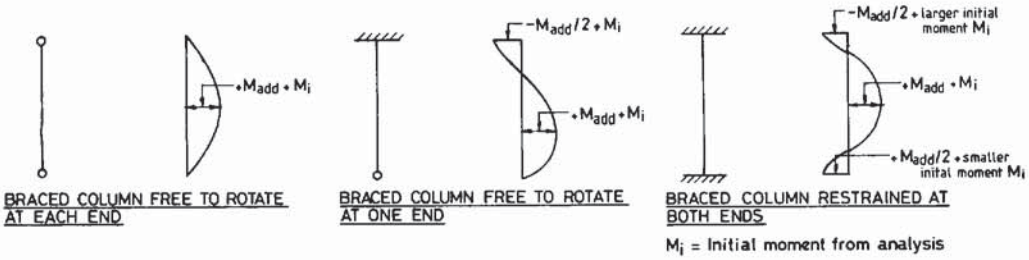


**SK 4/5** Braced column – additional moments.


**SK 4/6** Unbraced column – additional moments.

Braced column restrained at both ends:

the initial moment at mid height $M_i = 0.4\ M_1 + 0.6\ M_2 \geqslant 0.4\ M_2$

where $M_1$ = smaller end moment
$M_2$ = larger end moment

Unbraced column restrained at both ends:

the full additional moment may be combined with the initial end moment of stiffer joint. $M_{add}$ for the other end may be reduced proportional to the joint stiffness.

Determine $d/h$ corresponding to cover found in Step 3.
Find $e = M/N$ and then $e/h$.

Select appropriate Table from Tables 11.8 to 11.17 corresponding to $f_{cu}$ and $d/h$.
Calculate $N/bh$.
Find from the appropriate Table the value of $p$ which satisfies the calculated $N/bh$ against the $e/h$ due to applied moment. From $p$ calculate $A_{sc}$.

***See note in Step 4.***

***Step 6*** ***Design of column to biaxial bending and direct load***
Select diameter of reinforcement:

Find $h'$ and $b'$.
Find $M_x/h'$ and $M_y/b'$.

If $M_x/h' > M_y/b'$,

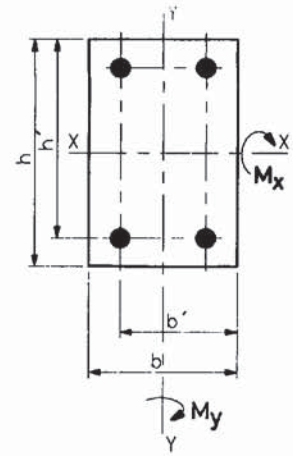


**SK 4/7** Column subject to biaxial bending.

$$M'_x = M_x + \left(\frac{\beta h'}{b'}\right) M_y$$

If $M_y/b' > M_x/h'$,

$$M'_y = M_y + \left(\frac{\beta b'}{h'}\right) M_x$$

Find $N/f_{cu}bh$.
Values of β are given in the table below.

| $N/f_{cu}bh$ | 0 | 0.1 | 0.2 | 0.3 | 0.4 | 0.5 | >0.6 |
|---|---|---|---|---|---|---|---|
| β | 1.00 | 0.88 | 0.77 | 0.65 | 0.53 | 0.42 | 0.30 |

***Note:*** Biaxial bending is reduced to uniaxial bending by the multiplier β.

Design as uniaxial bending, depending on which directional bending is predominant.

Find $A_{sc}$ following the method in Step 5.

***See note in Step 4.***

***Step 7*** ***Check shear stress***
Find design shear forces $V_x$ and $V_y$ from analysis.
Find $M_x/N$ and $M_y/N$.

***(1) If*** $\mathbf{M_x/N \leq 0.60h}$ ***and*** $\mathbf{M_y/N \leq 0.60b}$

$$V_x/bh' \leq 0.8\sqrt{f_{cu}} \leq 5\,\text{N/mm}^2$$

and $$V_y/b'h \leq 0.8\sqrt{f_{cu}} \leq 5\,\text{N/mm}^2$$

No shear check is necessary.

*(2) If* $M_x/N > 0.60h$ *and/or* $M_y/N > 0.60b$

Find $v_x = V_x/bh'$

$v_y = V_y/b'h$

$$p_x = \frac{100A_{sx}}{bh'}$$

$$p_y = \frac{100A_{sy}}{hb'}$$

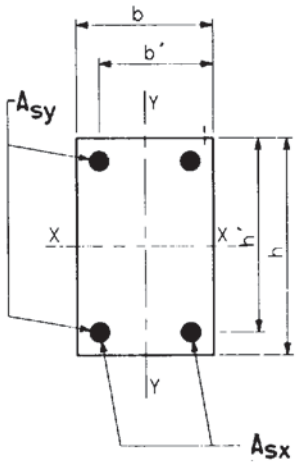


**SK 4/8** Areas of steel for shear check of column.

From Figs 11.2 to 11.6, find $v_{cx}$ and $v_{cy}$ i.e. the design concrete shear stresses corresponding to $p_x$ and $p_y$.
Modify $v_{cx}$ and $v_{cy}$ to take into account axial loading.

$$v'_{cx} = v_{cx} + \frac{0.6NV_xh}{A_cM_x}$$

$$v'_{cy} = v_{cy} + \frac{0.6NV_yb}{A_cM_y}$$

***Note:*** $N$ is +ve for compression and −ve for tension. $V_xh/M_x$ and $V_yb/M_y$ should not be greater than 1. Check: $(v_x/v'_{cx}) + (v_y/v'_{cy}) \leq 1$.
If this condition is not satisfied, then shear reinforcement in the form of links is required.

***Design of shear reinforcement for columns***

$$v''_{cx} = \frac{v'_{cx}v_x}{v_x + v_y}$$

$$v''_{cy} = \frac{v'_{cy}v_y}{v_x + v_y}$$

where $v''_{cx}$ = available concrete shear strength for calculation of shear reinforcement for bending about $x$-axis

$v''_{cy}$ = available concrete shear strength for calculation of shear reinforcement for bending about $y$-axis.

***Note:*** To avoid shear cracking prior to ultimate limit state, modification of the design concrete shear stress to account for direct load should be according to the following formula: $v'_c = v_c[1 + N/(A_c v_c)]^{\frac{1}{2}}$.

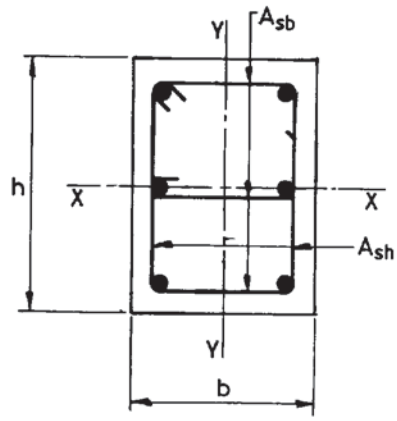


**SK 4/9** Shear reinforcement in column section.

$$V'_{cx} = v''_{cx} bh'$$
$$V'_{cy} = v''_{cy} b'h$$
$$V_{sx} = \frac{0.87 f_{yv} A_{sh} h'}{S}$$
$$V_{sy} = \frac{0.87 f_{yv} A_{sb} b'}{S}$$

where $f_{yv}$ = characteristic yield strength of link reinforcement
$A_{sh}$ = area of all legs of link reinforcement in one set resisting shear due to bending about $x$-axis
$A_{sb}$ = area of all legs of link reinforcement in one set resisting shear due to bending about $y$-axis
$S$ = spacing of a set of link in the column.

Check $V_{sx} \geq V_x - V'_{cx}$ and $V_{sy} \geq V_y - V'_{cy}$

### 4.3.2 Circular columns

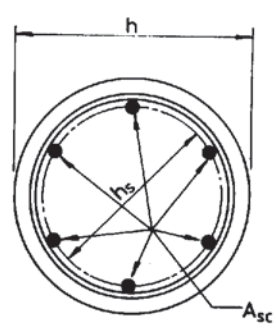


**SK 4/10** Circular column – typical section with minimum of six bars.

***Step 1*** ***Analysis***
Carry out analysis.

***Step 2*** ***Check slenderness of column***
Find $l_e/h$, when $h$ = diameter.
See Section 4.1.7 for the determination of effective height $l_e$.

***Note:*** For short columns, the ratio $l_e/h$ should be less than 15 for braced and 10 for unbraced.

***Step 3*** ***Determination of cover***
Determine cover required to reinforcement, as per Tables 11.6 and 11.7.

***Step 4*** ***Design of short columns***

***(1) No significant moment from analysis***
Select reinforcement size and at least six bars.

Find $A_c = 0.25\pi h^2 - A_{sc}$
Find $N = 0.4 f_{cu} A_c + 0.75 A_{sc} f_y$

Check $N \geq$ applied direct load

***(2) Column supporting continuous beams or flat slab where analysis does not allow for distribution of moment to the column***

Find $N = 0.35 f_{cu} A_c + 0.67 A_{sc} f_y$

Check $N \geq$ applied direct load

***(3) Column subjected to moment and direct load***
Determine $h_s/h$ corresponding to cover found in Step 3.
Find $e = M/N$ and then $e/R$, where $R$ = radius of column.
Select appropriate table from Tables 11.18 to 11.27 corresponding to $f_{cu}$ and $h_s/h$.
Calculate $N/R^2$.
Find, from the appropriate table, the value of $p$ which satisfies the calculated $N/R^2$ against the $e/R$ due to applied moment $M$.
Find $A_{sc}$ from $p$ and use at least six bars.

***Step 5*** ***Design of slender columns***

$$a = \frac{l_e^2}{2000h}$$

$$M_{add} = NaK$$

Combine this additional moment, $M_{add}$, with the moments obtained from analysis following the figures of Step 5 (Section 4.3.1), assuming $K = 1$ for conservatism.

Otherwise $N_{bal} = 0.15 f_{cu} h^2$

$$N_{uz} = 0.45 f_{cu} A_c + 0.87 f_y A_{sc}$$

and $K = \dfrac{N_{uz} - N}{N_{uz} - N_{bal}}$

which may be found by iteration using successive assumptions of $A_{sc}$.
Design the column for the combined moment $M$ and direct load $N$ following Step 4.

***Step 6*** ***Biaxial moment and direct load***

If biaxial moments are present by analysis on the column, combine these two orthogonal moments by taking the square root of the sum of the squares and then adding $M_{add}$ to the combined moment.
Design the column for the combined moment $M$ and the direct load $N$ following Step 4. $M = \sqrt{(M_x^2 + M_y^2)}$

***Step 7*** ***Check shear stress***

Find design shear forces $V_x$ and $V_y$ from analysis.
Find $M/N$, where $M = \sqrt{(M_x^2 + M_y^2)}$.
Find $V = \sqrt{(V_x^2 + V_y^2)}$

***(1) If* M/N ≤ *0.60*h**

$V/0.75A_c \leq 0.8\sqrt{f_{cu}} \leq 5\,\text{N/mm}^2$

No shear check is necessary.

***(2) If* M/N > *0.60*h, *check shear stress***

$$v = \frac{V}{0.75A_c} \leq 0.8\sqrt{f_{cu}} \leq 5\,\text{N/mm}^2$$

$$p = \frac{50A_{sc}}{0.75A_c} = \frac{66.7A_{sc}}{A_c}$$

Assuming only 50% of the total reinforcement is effective in tension.

Find $v_c$ corresponding to $p$ and $f_{cu}$ from Figs 11.2 to 11.5.

$$v_c' = v_c + \frac{0.6NVh}{A_cM}$$

If $v \leq v_c'$, no shear reinforcement is necessary.

When $v > v_c'$, find $V_c = 0.75v_c'A_c$.
$V_s = 0.87f_{yv}A_v(z/S)$ from truss analogy (see Section 1.6.1).
Find $z/R$ from appropriate table from Tables 11.18 to 11.27 corresponding to $f_{cu}$, $h_s/h$, $p$, $N/R^2$ and $e/R$.

$2A_s = A_v$

where $f_{yv}$ = characteristic yield strength of link reinforcement
$A_s$ = area of the link reinforcement in the form of hoop
$S$ = spacing of link.

Check $V_s \geq V - V_c$

***See note in Step 7 of Section 4.3.1***

### 4.3.3 Rectangular and circular columns

*Step 8* ***Minimum reinforcement***
For rectangular and circular columns,

$$\frac{100A_{sc}}{A_c} \geq 0.4$$

*Step 9* ***Maximum reinforcement***
For rectangular and circular columns,

vertically cast columns $\dfrac{100A_{sc}}{A_c} \leq 6$

horizontally cast columns $\dfrac{100A_{sc}}{A_c} \leq 8$

at laps of columns $\dfrac{100A_{sc}}{A_c} \leq 10$

*Step 10* ***Containment of reinforcement***

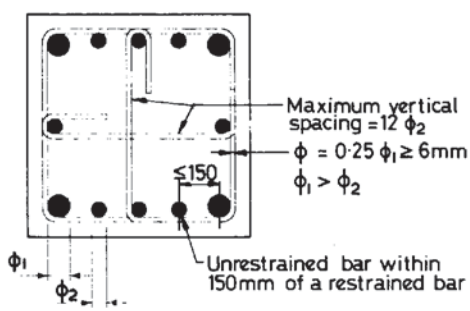


**SK 4/11** Typical arrangement of bars in a column section.

Minimum diameter of links = 0.25 times largest bar diameter ≥ 6 mm

Maximum spacing of links = 12 times smallest diameter of bar

Typical arrangement of bars is shown in SK4/11.

*Step 11* ***Check crack width (optional)***
No checks are necessary if applied ultimate load $\geq 0.2 f_{cu} A_c$

## 4.4 WORKED EXAMPLES

*Example 4.1* ***Design of a biaxially loaded slender column***
The column is braced in the X–X direction, i.e. for bending about Y–Y axis, and unbraced in the Y–Y direction, i.e. for bending about X–X axis.
Size of column: 400 × 600
Clear height of column = 8 m.

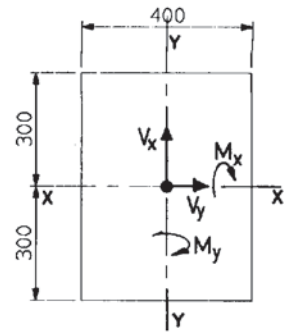


**SK 4/12** Biaxially loaded column section.

Beam size in the major direction = 400 × 500 at each floor.
Beam size in the minor direction = 300 × 350 at each floor.
Direct load on column = 2500 kN = $N$
Bending moment, $M_x = 150$ kNm $V_x = 150$ kN
Bending moment, $M_y = 80$ kNm $V_y = 80$ kN
All columns are of same size at each floor level.

***Step 1*** ***Analysis***
Not required.

***Step 2*** ***Check slenderness of column (see Tables 4.1 and 4.2)***
Effective height, $l_{ex} = 1.80 \times l_o$
$= 1.80 \times 8$
$= 14.4$ m for unbraced column

Assume end condition 2 at bottom and 3 at top for bending about x axis.

Effective height, $l_{ey} = 1.0 \times 8$
$= 8$ m for braced column

Assume end condition 3 at both top and bottom for bending about y axis.

$$\frac{l_{cx}}{h} = \frac{14.4}{0.6} = 24 > 10 \text{ for unbraced}$$

$$\frac{l_{cy}}{b} = \frac{8.0}{0.4} = 20 > 15 \text{ for braced}$$

Hence the column should be designed as slender about both axes.

***Step 3*** ***Determination of cover***
Grade of concrete = 40 N/mm$^2$
Exposure = moderate
Fire resistance = 2 hours
MSA = 20 mm
Minimum nominal cover = 30 mm, from Tables 11.6 and 11.7
Diameter of link = 10 mm assumed
Diameter of main bars = 40 mm assumed

$$h' = h - \text{cover} - \text{dia. of link} - \tfrac{1}{2}\text{dia. of bar}$$
$$= 600 - 30 - 10 - 20$$
$$= 540\,\text{mm}$$

$$b' = 400 - 30 - 10 - 20$$
$$= 340\,\text{mm}$$

***Step 4*** ***Design of short columns***
Not required.

***Step 5*** ***Design of slender columns***
Assume $100A_{sc}/bh = 5$

$$A_c = \text{net concrete area} = (1 - 0.05)bh = 0.95bh$$

$$N_{uz} = 0.45f_{cu}A_c + 0.87f_yA_{sc}$$
$$= (0.95 \times 0.45 \times 40 + 0.87 \times 460 \times 0.05) \times 400 \times 600 \times 10^{-3}$$
$$= 8906\,\text{kN}$$

$$N_{bal} = 0.25f_{cu}bh$$
$$= 0.25 \times 40 \times 400 \times 600 \times 10^{-3}$$
$$= 2400\,\text{kN}$$

$$K = \frac{N_{uz} - N}{N_{uz} - N_{bal}} = \frac{8906 - 2500}{8906 - 2400}$$
$$= 0.98 \text{ for assumed 5\% reinforcement}$$

$$a_x = \frac{1}{2000}\left(\frac{l_{cx}}{b}\right)^2 hK$$
$$= \frac{1}{2000} \times \left(\frac{14\,400}{600}\right)^2 \times 600 \times 0.98$$
$$= 169.3\,\text{mm}$$

$$a_y = \frac{1}{2000}\left(\frac{l_{cy}}{h}\right)^2 bK$$
$$= \frac{1}{2000} \times \left(\frac{8000}{400}\right)^2 \times 400 \times 0.98$$
$$= 78.4\,\text{mm}$$

$$M_{add\,x} = Na_xK$$
$$= 2500 \times 0.1693$$
$$= 423\,\text{kNm}$$

$$M_{add\,y} = Na_yK$$
$$= 2500 \times 0.0784$$
$$= 196\,\text{kNm}$$

***Step 6*** ***Biaxial moment and direct load***
$M_x = 150 + 423 = 573\,\text{kNm}$ (see SK 4/6 – column free to rotate one end.)

$M_y = 80 + 196 = 276\,\text{kNm}$ (see SK 4/5 – column free to rotate both ends.)

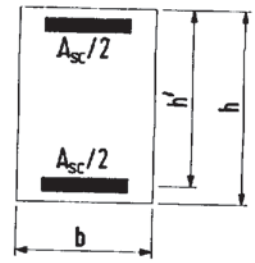


**SK 4/13** Equivalent uniaxial bending of columns.

$$\frac{M_x}{h'} = \frac{573}{0.54} = 1061\,\text{kN}$$

$$\frac{M_y}{b'} = \frac{276}{0.34} = 812\,\text{kN}$$

$$\frac{N}{bhf_{cu}} = \frac{2500 \times 10^3}{400 \times 600 \times 40} = 0.26$$

$\beta = 0.70$ from table in Step 6 of Section 4.3.1.

Biaxial bending: $M_x/h' > M_y/b'$

$$M'_x = M_x + \beta\left(\frac{h'}{b'}\right)M_y$$

$$= 573 + 0.70 \times \left(\frac{540}{340}\right) \times 276$$

$$= 880\,\text{kNm}$$

$$k = \frac{h'}{h} = \frac{540}{600} = 0.90 \qquad e = \frac{M}{N} = \frac{880}{2500} = 0.352\,\text{m}$$

$$\frac{e}{h} = \frac{0.352}{0.600} = 0.59$$

$$\frac{N}{bh} = \frac{2500 \times 10^3}{400 \times 600} = 10.4\,\text{N/mm}^2$$

Select Table 11.12 for $f_{cu} = 40\,\text{N/mm}^2$ and $k = 0.90$.
From Table 11.12: for $e/h = 0.6$ and $p = 2.0$, $N/bh = 9.05$, and for $p = 3.0$, $N/bh = 10.95$.
By linear interpolation, $p = 2.69$ for $e/h = 0.59$, and $N/bh = 10.4$.

$$A_{sc} = \frac{2.69 \times 400 \times 600}{100}$$

$$= 6456\,\text{mm}^2$$

Use 4 no. 32 dia. bars on each face 400 wide ($6434\,\text{mm}^2$).

See Step 5: revised $N_{uz} = 6705\,\text{kN}$ and corresponding $K = 0.98$; no change.

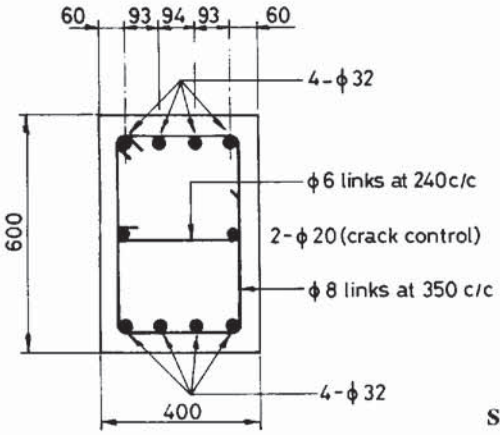


**SK 4/14** Designed column section.

***Step 7*** ***Shear check***

$$\frac{M_x}{N} = \frac{150}{2500}$$

$$= 0.06\,\text{m} < 0.60h$$

$$\frac{M_y}{N} = \frac{80}{2500}$$

$$= 0.032\,\text{m} < 0.60b$$

$$\frac{V_x}{bh'} = \frac{150 \times 10^3}{400 \times 540} = 0.69\,\text{N/mm}^2 < 0.8\sqrt{f_{cu}} < 5\,\text{N/mm}^2$$

$$\frac{V_y}{b'h} = \frac{80 \times 10^3}{600 \times 340} = 0.39\,\text{N/mm}^2$$

No shear check is necessary.

***Step 8*** ***Minimum reinforcement***

Minimum reinforcement = 0.4% satisfied

***Step 9*** ***Maximum reinforcement***

Maximum reinforcement = 6% satisfied

***Step 10*** ***Containment of reinforcement***

Minimum diameter of link = $0.25 \times 32$
= 8 mm

Maximum spacing of links = $12 \times$ smallest bar diameter
= $12 \times 32 = 384$ mm

***Step 11*** ***Check crack width***

$N = 2500\,\text{kN} > 0.2 f_{cu} A_c = 1920\,\text{kN}$

So no check necessary.

***Example 4.2 Design of a column with predominant moment about the major axis***

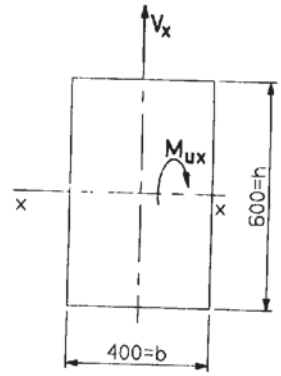


**SK 4/15** Column with moment about X–X axis.

Rectangular section.

$h = 600\,\text{mm} \quad b = 400\,\text{mm}$

Ultimate bending moment, $M_{ux} = 640\,\text{kNm}$

Ultimate direct load, $N_u = 1280\,\text{kN}$

Ultimate shear force, $V_x = 320\,\text{kN}$

Service bending moment, $M_{sx} = 400\,\text{kNm}$

Service direct load, $N_s = 800\,\text{kN}$

Clear height of column = 4 m between floors

End condition (1) at both ends of column in both directions of bending. Unbraced column in both directions of bending.

***Step 1*** ***Analysis***
Not required.

***Note:*** Minimum eccentricity = 20 mm

$$M_{uy} = 20 \times 1280\,\text{kNmm} = 25.6\,\text{kNm}$$

By inspection this moment in isolation will not cause a more onerous design than the predominant moment $M_{ux}$.

***Step 2*** ***Check slenderness of column (see Table 4.2)***
Effective height, $l_{ex} = 1.2 \times 4 = 4.8\,\text{m}$
$l_{ey} = 1.2 \times 4 = 4.8\,\text{m}$

$$\frac{l_{ex}}{h} = \frac{4.8}{0.6} = 8 < 10$$

$$\frac{l_{ey}}{b} = \frac{4.8}{0.4} = 12 > 10$$

The column is slender about minor axis.

***Step 3*** ***Determination of cover***

Grade of concrete = 40 N/mm$^2$
Exposure = severe
Fire resistance = 2 hours
Maximum size of aggregates = 20 mm
Minimum nominal cover = 30 mm
Diameter of link = 10 mm assumed
Diameter of main bars = 25 mm assumed

$$d = h' = h - \text{cover} - \text{dia. of link} - \tfrac{1}{2}\text{dia. of bar}$$
$$= 600 - 40 - 10 - 12.5$$
$$= 537.5\,\text{mm}$$

$$b' = 400 - 40 - 10 - 12.5$$
$$= 337.5\,\text{mm}$$

***Step 4*** ***Design of short columns***

Not required.

***Step 5*** ***Design of slender columns***

$$\frac{h}{b} = 1.5 < 3$$

$$\frac{l_{ex}}{h} = 8 < 20$$

Additional moment about minor axis can be ignored (see Table 4.3).

$$a_x = \frac{1}{2000}\left(\frac{l_{ex}}{b}\right)^2 hK$$
$$= \frac{1}{2000} \times \left(\frac{4800}{400}\right)^2 \times 600 \times 1 \qquad \text{(assume } K = 1 \text{ for conservatism)}$$
$$= 43.2\,\text{mm}$$

$$M_{\text{add}\,x} = Na_x$$
$$= 1280 \times 0.0432$$
$$= 55.3\,\text{kNm}$$

$$M_x = 640 + 55.3 \quad \text{(see SK 4/6 – column restrained at both ends)}$$
$$= 695.3\,\text{kNm}$$

Design as a beam following Step 10 of Section 2.3.

$$M_d = M + N\left(\frac{h}{2} - d_1\right)$$
$$= 695.3 + 1280\left(\frac{0.6}{2} - 0.0625\right)$$
$$= 999.3\,\text{kNm}$$

$$K = \frac{M_d}{f_{cu}bd^2} = \frac{999.3 \times 10^6}{40 \times 400 \times 537.5^2}$$
$$= 0.216 > 0.156$$

Compression reinforcement is required.

$$z = 0.775d$$
$$= 444\,\text{mm}$$

$$A'_s = \frac{(K - 0.156)f_{cu}bd^2}{0.87f_y(d - d')}$$
$$= \frac{(0.216 - 0.156) \times 40 \times 400 \times 537.5^2}{0.87 \times 460 \times (537.5 - 62.5)}$$
$$= 1459\,\text{mm}^2$$

$$A_s = \left(\frac{0.156f_{cu}bd^2}{0.87f_yz}\right) + A'_s - \frac{N}{0.87f_y}$$
$$= \left(\frac{0.156 \times 40 \times 400 \times 537.5^2}{0.87 \times 460 \times 444}\right) + 1459 - \left(\frac{1280 \times 10^3}{0.87 \times 460}\right)$$
$$= 2319\,\text{mm}^2$$

Use 3 no. 32 mm dia. bars each face (2412 mm$^2$)

Design by using Table 11.12.

$$e = M/N = 0.543 \qquad e/h = 0.905$$

$$k = \frac{h'}{h} = \frac{537.5}{600} = 0.90$$

$$\frac{N}{bh} = \frac{1280 \times 10^3}{400 \times 600} = 5.33\,\text{N/mm}^2$$

From Table 11.12 by linear interpolation, $p = 2\%$.

$$A_{sc} = \frac{2 \times 400 \times 600}{100} = 4800\,\text{mm}^2$$

Use 3 no. 32 dia. bars on each face (2412 mm$^2$).

***Note:*** The two different design methods produce exactly the same result.

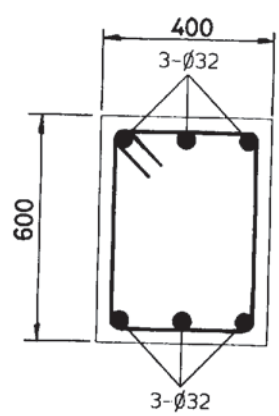


**SK 4/16** Designed column section.

***Step 6*** ***Biaxial moment and direct load***
Not required.

***Step 7*** ***Check shear stress***

$$\frac{M_x}{N} = \frac{640}{1280} = 0.5 > 0.60h = 0.36\,\text{m}$$

Shear check is required.

$$v = \frac{V_x}{h'b} = \frac{320 \times 10^3}{400 \times 536}$$
$$= 1.49\,\text{N/mm}^2 < 5\,\text{N/mm}^2$$

$$h' = 600 - 40 - 8 - 16 = 536\,\text{mm}$$

$$p = \frac{100A_s}{bh'}$$
$$= \frac{100 \times 2412}{400 \times 536}$$
$$= 1.125$$

From Fig. 11.5,

$$v_c = 0.77\,\text{N/mm}^2$$

$$v_c' = v_c + \frac{0.6NVh}{A_cM}$$

$$\frac{Vh}{M} = \frac{320 \times 10^3 \times 600}{640 \times 10^6} = 0.30 < 1$$

$$v_c' = 0.77 + \frac{0.60 \times 1280 \times 10^3 \times 0.3}{400 \times 600}$$
$$= 1.73\,\text{N/mm}^2 > 1.49\,\text{N/mm}^2$$

No shear reinforcement is necessary.

To avoid shear cracks at ultimate load, use the following modification formula:

$$v_c' = v_c\left(1 + \frac{N}{A_cv_c}\right)^{\frac{1}{2}}$$
$$= 0.77\left(1 + \frac{1280 \times 10^3}{400 \times 600 \times 0.77}\right)^{\frac{1}{2}}$$
$$= 2.167\,\text{N/mm}^2 > 1.73\,\text{N/mm}^2$$

This modified higher value of design concrete shear strength may not be used.

***Step 8*** ***Minimum reinforcement***
Minimum reinforcement = 0.4% satisfied

***Step 9*** ***Maximum reinforcement***

Maximum reinforcement = 6% satisfied

***Step 10*** ***Containment of reinforcement***

Minimum diameter of link = 0.25 × 32
= 8 mm

Maximum spacing of links = 12 × dia. of bar
= 12 × 32
= 384 mm > 350 mm OK

Centre-to-centre spacing of bars = 136 mm < 150 mm

Central 32 mm diameter bar need not be restrained.
Use 2-legged links 8 mm diameter at 350 mm centres.

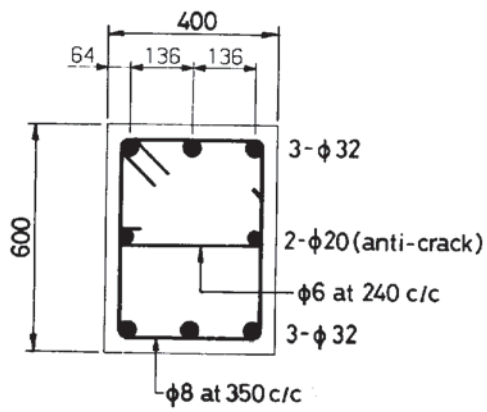


**SK 4/17** Final column section.

***Step 11*** ***Check crack width (optional)***

$A_s = A_s' = 2412\,\text{mm}^2$

$d = 536\,\text{mm}$

$$m = \frac{E_s}{E_c} = 10$$

$d' = 64\,\text{mm}$

Service bending moment, $M_{sx} = 400\,\text{kNm}$

Service direct load, $N_s = 800\,\text{kN}$

The formulae used below are for a triangular concrete stress block (see Section 1.13.2).
Assume value of $x = d/2 = 260\,\text{mm}$, say.

***First trial***

$q_1 = bx = 400 \times 260 = 104\,000\,\text{mm}^2$

(See Section 1.13.2 for explanation of symbols.)

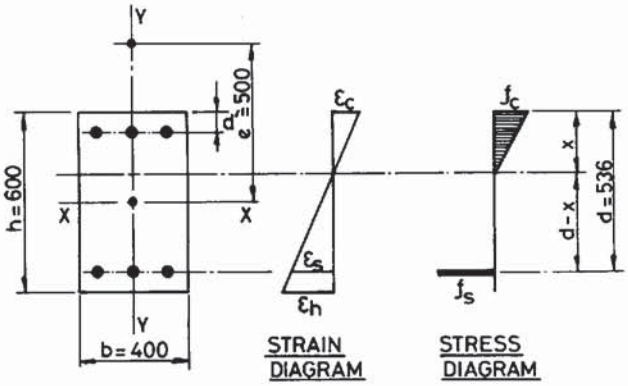


**SK 4/18** Calculation of crack width.

$$g = \frac{0.5q_1x + mA_sd + (m-1)A_s'd'}{q_1 + mA_s + (m-1)A_s'}$$

$$= \frac{0.5 \times 104\,000 \times 260 + (10 \times 2412 \times 536) + (9 \times 2412 \times 64)}{104\,000 + (10 \times 2412) + (9 \times 2412)}$$

$$= 185.8\,\text{mm}$$

$$e = \frac{M}{N} = \frac{400}{800} = 0.5\,\text{m} = 500\,\text{mm}$$

$$k_1 = \left(\frac{e-g}{d}\right) + 1$$

$$= \left(\frac{500 - 185.8}{536}\right) + 1$$

$$= 1.586$$

$$k_2 = \frac{x}{2d}\left(1 - \frac{x}{3d}\right)$$

$$= \left(\frac{260}{2 \times 536}\right)\left(1 - \frac{260}{3 \times 536}\right)$$

$$= 0.203$$

$$k_3 = (m-1)\left(1 - \frac{d'}{x}\right)$$

$$= 9\left(1 - \frac{64}{260}\right)$$

$$= 6.785$$

$$f_c = \frac{Nk_1}{k_2bd + k_3A_s'\left(1 - \frac{d'}{d}\right)}$$

$$= \frac{800 \times 10^3 \times 1.586}{0.203 \times 400 \times 536 + 6.785 \times 2412 \times \left(1 - \frac{64}{536}\right)}$$

$$= 21.90\,\text{N/mm}^2$$

$$f_s = \frac{f_c(0.5q_1 + k_3A_s') - N}{A_s}$$

$$= \frac{21.90 \times (0.5 \times 104\,000 + 6.785 \times 2412) - 800 \times 10^3}{2412}$$

$$= 289.1\,\text{N/mm}^2$$

Check: $$x = \frac{d}{1 + \left(\frac{f_s}{mf_c}\right)}$$

$$= \frac{536}{1 + \left(\frac{289.1}{10 \times 21.9}\right)}$$

$$= 231\,\text{mm} < 260\,\text{mm} \quad \text{assumed}$$

***Second trial***

Assume $x = (260 + 231)/2 = 240\,\text{mm}$ say

$$q_1 = 96\,000\,\text{mm}^2$$

$$g = 182.2\,\text{mm}$$

$$k_1 = 1.593$$
$$k_2 = 0.190$$
$$k_3 = 6.60$$

$$f_c = 23.27\,\text{N/mm}^2$$
$$f_s = 285.0\,\text{N/mm}^2$$

$x = 240.8\,\text{mm}$ assumed $x = 240\,\text{mm}$, hence OK

$$\varepsilon_s = \frac{f_s}{E_s} = \frac{285}{200 \times 10^3} = 1.425 \times 10^{-3}$$

$$\varepsilon_h = \left(\frac{h - x}{d - x}\right)\varepsilon_s$$

$$= \left(\frac{600 - 240}{536 - 240}\right) \times 1.425 \times 10^{-3}$$

$$= 1.733 \times 10^{-3}$$

$$\varepsilon_{mh} = \varepsilon_h - \frac{b(h - x)^2}{3E_sA_s(d - x)}$$

$$= 1.733 \times 10^{-3} - \frac{400 \times (600 - 240)^2}{3 \times 200 \times 10^3 \times 2412 \times (536 - 240)}$$

$$= 1.612 \times 10^{-3}$$

$$a_{c1} = \sqrt{(64^2 + 64^2)} - 16$$
$$= 74.5\,\text{mm}$$

$$a_{c2} = \sqrt{(64^2 + 68^2)} - 16$$
$$= 77.4\,\text{mm}$$

$$a_{cr} = 77.4\,\text{mm}$$

$$W_{cr} = \frac{3a_{cr}\,\varepsilon_m}{1 + 2\left(\dfrac{a_{cr} - C_{min}}{h - x}\right)}$$

$$= \frac{3 \times 77.4 \times 1.612 \times 10^{-3}}{1 + 2\left(\dfrac{77.4 - 48}{600 - 240}\right)}$$

$$= 0.32\,\text{mm} > 0.3\,\text{mm}$$

Crack width slightly exceeded and may be allowed.

***Example 4.3*** ***Design of a member with uniaxial moment and tension***

Rectangular section.
Size: 600 mm × 400 mm

Ultimate direct load in tension = 250 kN

Ultimate bending moment, $M_x = 250$ kNm

Ultimate shear force, $V_x = 250$ kN

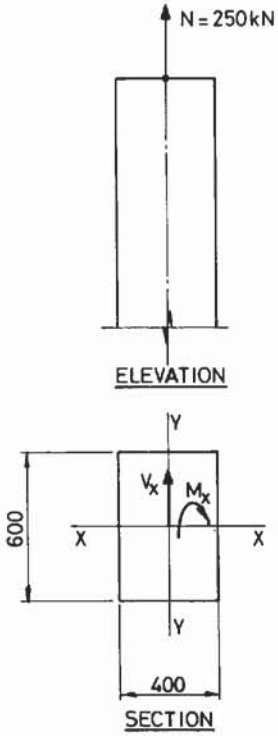


**SK 4/19** Member subject to uniaxial bending and tension.

***Step 1*** ***Analysis***

Not required.

***Step 2*** ***Check slenderness of member***

Not required.

***Step 3*** ***Determination of cover***

Grade of concrete = 40 N/mm$^2$
Exposure = moderate
Fire resistance required = 1 hour
Maximum size of aggregates = 20 mm
Minimum nominal cover = 30 mm from Tables 11.6 and 11.7
Diameter of link = 10 mm assumed
Diameter of main bar = 40 mm assumed

$$h' = h - \text{cover} - \text{dia. of link} - \tfrac{1}{2}\text{dia. of bar}$$
$$= 600 - 30 - 10 - 20$$
$$= 540\,\text{mm}$$

$$b' = 400 - 30 - 10 - 20$$
$$= 340\,\text{mm}$$

***Step 4*** ***Design of short columns***

***Method 1*** ***Design as RC beam (see Step 10 of Section 2.3)***

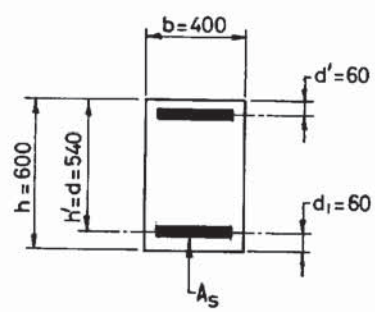


**SK 4/20** Design of column section.

$$M_x = 250\,\text{kNm}$$

$$N = -250\,\text{kN}$$

$$M_d = M_x - N\left(\frac{h}{2} - d_1\right)$$
$$= 250 - 250 \times (0.3 - 0.06)$$
$$= 190\,\text{kNm}$$

$$K = \frac{M_d}{f_{cu}bd^2} = \frac{190 \times 10^6}{40 \times 400 \times 540^2}$$
$$= 0.04 < 0.156 \quad \text{no compressive reinforcement}$$

$$z = h'\left[0.5 + \sqrt{\left(0.25 - \frac{K}{0.9}\right)}\right]$$

$$= 540\left[0.5 + \sqrt{\left(0.25 - \frac{0.04}{0.9}\right)}\right] \leq 0.95d$$

$$= 0.95 \times 540 = 513\,\text{mm}$$

$$A_s = \frac{M}{0.87 f_y z} + \frac{N}{0.87 f_y}$$

$$= \frac{190 \times 10^6}{0.87 \times 513 \times 460} + \frac{250 \times 10^3}{0.87 \times 460}$$

$$= 1550\,\text{mm}^2$$

Use 2 no. 32 dia. (1608 mm$^2$) bars on each short face.

***Method 2 Simple steel beam theory***

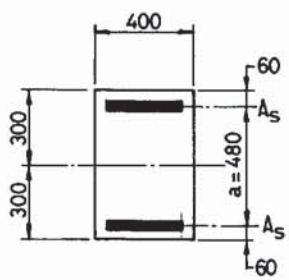


**SK 4/21** Design by steel beam theory.

(1) Assume compression and tension steel in equal amount to form a couple to resist the moment.
(2) Assume axial tension carried equally by steel on compression and tension side.

Lever arm of steel (centre-to-centre distance) $= a = h' - 60 = 480\,\text{mm}$

$$\text{Steel required for bending moment} = \frac{M}{0.87 f_y a}$$

$$= \frac{250 \times 10^6}{0.87 \times 460 \times 480} = 1301\,\text{mm}^2$$

$$\text{Steel required for axial tension on each face} = \frac{0.5N}{0.87 f_y}$$

$$= \frac{0.5 \times 250 \times 10^3}{0.87 \times 460}$$

$$= 312\,\text{mm}^2$$

Total steel required on each face $= 1301 + 312 = 1613\,\text{mm}^2$

Again, 2 no. 32 dia. (1608 mm$^2$) on each face will be adequate.

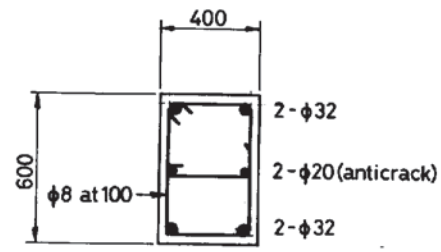


**SK 4/22** Designed concrete section.

***Note:*** Both methods produce the same result but Method 2 is very conservative usually.

***Step 5*** ***Design of slender columns***
Not required.

***Step 6*** ***Biaxial bending and direct load***
Not required.

***Step 7*** ***Check shear stress***

$$v = \frac{V_x}{h'b} = \frac{250 \times 10^3}{540 \times 400}$$
$$= 1.16\,\text{N/mm}^2 < 5\,\text{N/mm}^2$$

$$p = \frac{100A_s}{bh'} = \frac{100 \times 1608}{540 \times 400}$$
$$= 0.74\%$$

From Fig. 11.5,

$$v_c = 0.67\,\text{N/mm}^2$$

$$v_c' = v_c + \frac{0.6NVh}{A_cM}$$

$$\frac{Vh}{M} = \frac{250 \times 10^3 \times 600}{250 \times 10^6} = 0.60 < 1$$

$$v_c' = 0.67 - \frac{0.6 \times 0.6 \times 250 \times 10^3}{400 \times 600}$$
$$= 0.295\,\text{N/mm}^2 < 1.16\,\text{N/mm}^2$$

***Note:*** $N$ is $-$ve in tension.

Shear reinforcement is required.

$$V_c' = 0.295 \times 540 \times 400 \times 10^{-3} = 63.7\,\text{kN}$$

Assume 8 mm diameter links ($f_y = 460\,\text{N/mm}^2$) at 100 mm centres.

$$V_s = \frac{0.87 f_{yv} A_{sh} h'}{S}$$

$$= \frac{10^{-3} \times (0.87 \times 460 \times 100 \times 540)}{100} = 216\,\text{kN}$$

$$V_s > V - V_c' = 250 - 63.7 = 186.3\,\text{kN} \quad \text{okay}$$

***Step 8*** ***Minimum reinforcement***

Minimum reinforcement = 0.4%

Reinforcement provide $= 3216\,\text{mm}^2$

$$= \frac{3216 \times 100}{400 \times 600}$$

$= 1.34\%$ okay

***Step 9*** ***Maximum reinforcement***

Maximum reinforcement = 6% satisfied

***Step 10*** ***Containment of reinforcement***

Minimum diameter of link $= 0.25 \times 32 = 8\,\text{mm}$ satisfied

Maximum spacing of links $= 12 \times$ dia. of bar

$= 12 \times 32 = 384\,\text{mm}$ satisfied

***Step 11*** ***Check crack width***

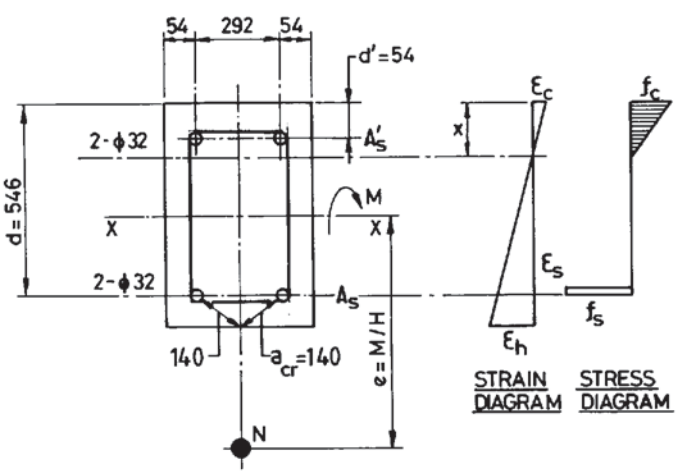


**SK 4/23** Crack width calculations.

Service bending moment = 160 kNm

Service tension = 160 kN

Assume depth of neutral axis $x = h/2 = 300\,\text{mm}$

The formulae used below assume a triangular concrete stress block (see Section 1.13.2).

Assume eccentricity $e$ from centre of stressed area, i.e. at $g$ from extreme compressive fibre.

***First trial***

$$e = \frac{M}{N} = \frac{160 \times 10^3}{160} = 1000\,\text{mm}$$

$$d' = 30 + 8 + 16 = 54\,\text{mm}$$

$$d = 600 - 30 - 8 - 16 = 546\,\text{mm}$$

$$\frac{x}{d} = \frac{300}{546} = 0.55$$

$$A_s = A_s' = 1608\,\text{mm}^2$$

$$q_1 = bx = 400 \times 300 = 12 \times 10^4\,\text{mm}^2$$

$$m = \frac{E_s}{E_c} = 10$$

$$g = \frac{0.5q_1x + mA_sd + (m-1)A_s'd'}{q_1 + mA_s + (m-1)A_s'}$$

$$= 183\,\text{mm}$$

$$k_1 = \left(\frac{e+g}{d}\right) - 1$$

$$= 1.167$$

$$k_2 = \frac{x}{2d}\left(1 - \frac{x}{3d}\right)$$

$$= 0.224$$

$$k_3 = (m-1)\left(1 - \frac{d'}{x}\right)$$

$$= 7.38$$

$$f_c = \frac{Nk_1}{k_2bd + k_3A_s'\left(1 - \frac{d'}{d}\right)}$$

$$= 3.13\,\text{N/mm}^2$$

$$f_s = \frac{f_c(0.5q_1 + k_3A_s') + N}{A_s}$$

$$= 239.4\,\text{N/mm}^2$$

Check $$x = \frac{d}{1 + \left(\frac{f_s}{mf_c}\right)}$$

$$= 62.8\,\text{mm} < 300\,\text{mm} \quad \text{assumed}$$

***Second trial***

Assume $x = 130\,\text{mm}$

$$q_1 = 52\,000\,\text{mm}^2$$

$$g = 157\,\text{mm}$$

$$k_1 = 1.119$$
$$k_2 = 0.11$$
$$k_3 = 5.26$$

$$f_c = 5.66\,\text{N/mm}^2$$
$$f_s = 221\,\text{N/mm}^2$$

$$x = 111\,\text{mm} \qquad \text{near enough to } 130\,\text{mm}$$

No more trials are required.

Tension in steel = 221 N/mm$^2$

$x = 115\,\text{mm}$ say

$$\varepsilon_s = \frac{f_s}{E_s} = \frac{221}{200 \times 10^3} = 1.105 \times 10^{-3}$$

$$\varepsilon_h = \left(\frac{h - x}{d - x}\right)\varepsilon_s$$
$$= \left(\frac{600 - 115}{546 - 115}\right) \times 1.105 \times 10^{-3}$$
$$= 1.243 \times 10^{-3}$$

$$\varepsilon_{mh} = \varepsilon_h - \frac{b(h - x)^2}{3E_sA_s(d - x)}$$
$$= 1.016 \times 10^{-3}$$

$$a_{cr} = \sqrt{(54^2 + 146^2)} - 16$$
$$= 140\,\text{mm}$$

$$W_{cr} = \frac{3a_{cr}\,\varepsilon_m}{1 + 2\left(\dfrac{a_{cr} - c_{min}}{h - x}\right)}$$
$$= 0.29\,\text{mm} < 0.3\,\text{mm} \quad \text{OK}$$

***Step 12*** ***Spacing of bars (required for members in tension)***
See Step 24 of Section 2.3.

MSA + 5 = 25 mm

Dia. of bar = 32 mm

Clear distance between bars = 260 mm > 32 mm OK

Maximum clear spacing of bars in tension $\leq 47\,000/f_s \leq 300\,\text{mm}$

$f_s = 221\,\text{N/mm}^2$ from Step 10.

Maximum spacing $\leq 47\,000/221 \leq 213\,\text{mm}$

***Note:*** Actual clear spacing is 260 mm which does not satisfy this condition. Since crack width calculations show that the crack of 0.3 mm may not be exceeded, this spacing of bars need not be changed.

***Example 4.4*** ***Design of a member with biaxial moment and tension***

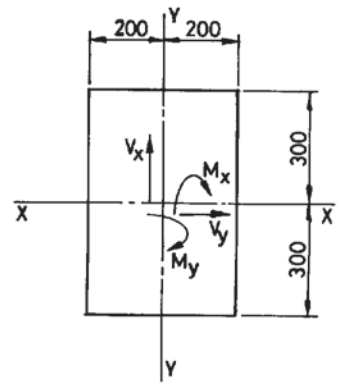


**SK 4/24** Section subject to biaxial bending and tension.

Rectangular section.
Size: 600 mm × 400 mm

Ultimate direct load in tension = 250 kN

Ultimate bending moment, $M_x = 250\,\text{kNm}$

Ultimate bending moment, $M_y = 150\,\text{kNm}$

Ultimate shear force, $V_x = 250\,\text{kN}$

Ultimate shear force, $V_y = 150\,\text{kN}$

***Step 1*** ***Analysis***
Not required.

***Step 2*** ***Check slenderness of member***
Not required because the member is in tension.

***Step 3*** ***Determination of cover***
Grade of concrete = 40 N/mm$^2$
Exposure = moderate
Fire resistance required = 1 hour
Maximum size of aggregates = 20 mm
Minimum nominal cover = 30 mm from Tables 11.6 and 11.7
Diameter of link = 10 mm assumed
Diameter of main bar = 40 mm assumed

$$h' = h - \text{cover} - \text{dia. of link} - \tfrac{1}{2}\text{dia. of bar}$$
$$= 600 - 30 - 10 - 20$$
$$= 540\,\text{mm}$$

$$b' = 400 - 30 - 10 - 20$$
$$= 340\,\text{mm}$$

***Step 4*** ***Design of short columns***
Not required.

***Step 5*** ***Design of slender columns***
Not required.

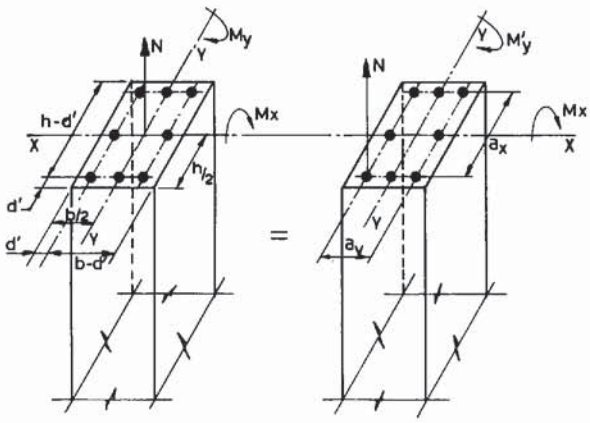


**SK 4/25** Design as steel beam with transferred tension.

***Step 6*** ***Biaxial bending and direct load***

***Method 1*** ***Design as steel beam with transferred tension***

$M_x = 250\,\text{kNm}$

$N = -250\,\text{kN}$ (tension)

$$M'_x = M_x - N\left(\frac{h}{2} - d'\right)$$
$$= 250 - 250(0.3 - 0.06)$$
$$= 190\,\text{kNm}$$

$$M'_y = M_y - N\left(\frac{b}{2} - d'\right)$$
$$= 150 - 250(0.2 - 0.6)$$
$$= 115\,\text{kNm}$$

***Note:*** This operation means that the tension (250 kN) has been transferred to one corner of the rectangular section.

Taking the steel beam approach, assume that the lever arm to resist bending moment about each axis is the distance between the centre of steel reinforcement on each face.

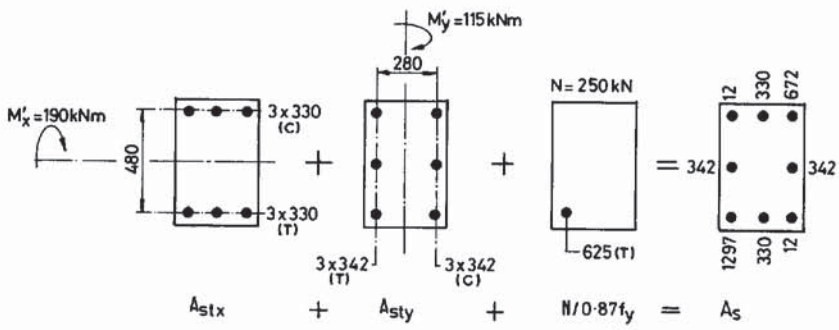


**SK 4/26** Design as steel beam with transferred tension.

$$a_x = 600 - 2 \times 60 = 480\,\text{mm}$$

$$a_y = 400 - 2 \times 60 = 280\,\text{mm}$$

$$A_{stx} = \frac{M'_x}{0.87 f_y a_x}$$

$$= \frac{190 \times 10^6}{0.87 \times 460 \times 480}$$

$$= 989\,\text{mm}^2$$

Assume 3 no. bars of $330\,\text{mm}^2$ each on each short face.

$$A_{sty} = \frac{M'_y}{0.87 f_y a_y}$$

$$= \frac{115 \times 10^6}{0.87 \times 460 \times 280}$$

$$= 1026\,\text{mm}^2$$

Assume 3 no. bars of $342\,\text{mm}^2$ each on each long face.

Area of bar required at a corner of the member due to the transferred tension

$$= \frac{N}{0.87 f_y}$$

$$= \frac{250 \times 10^3}{0.87 \times 460} = 625\,\text{mm}^2$$

Total area of bar required in one corner $= 330 + 342 + 625$
$= 1297\,\text{mm}^2$

One no. 40 diameter bar at each corner (1257 mm$^2$) with 1 no. 25 diameter bar at the centre of each face (491 mm$^2$ each bar) will be adequate because 491 mm$^2$ is greater than 330 mm$^2$ or 342 mm$^2$ found before.

***Method 2 Design as steel beam without transferred tension***

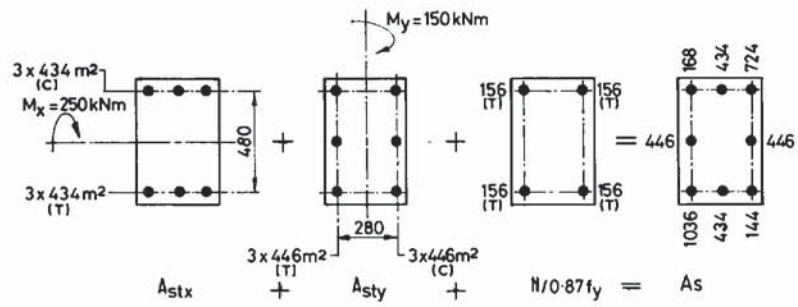


**SK 4/27** Design as steel beam without transferred tension.

$a_x = 480\,\text{mm}$ as before

$a_y = 280\,\text{mm}$ as before

$$A_{stx} = \frac{M_x}{0.87 f_y a_x}$$
$$= \frac{250 \times 10^6}{0.87 \times 460 \times 480}$$
$$= 1301\,\text{mm}^2$$

Assume 3 no. bars of 434 mm$^2$ each on each short face.

$$A_{sty} = \frac{M_y}{0.87 f_y a_y}$$
$$= \frac{150 \times 10^6}{0.87 \times 460 \times 280}$$
$$= 1338.5\,\text{mm}^2$$

Assume 3 no. bars of 446 mm$^2$ each on each long face.

Area of steel required for tension = 625 mm$^2$ as before

This area can be divided over the total number of 4 no. corner bars in the member. Hence, use 4 no. bars of 156 mm$^2$ each.

Area of corner bars = 434 + 446 + 156
= 1036 mm$^2$ (use 40 mm dia. bars = 1257 mm$^2$)

The arrangement of reinforcement is exactly the same as before. Use 4 no. 40 mm dia. bars in the corners and 1 no. 25 mm dia. bar at the centre of each face because 1 no. 25 mm bar equal to 491 mm$^2$ is bigger than 434 mm$^2$ or 446 mm$^2$ found before.

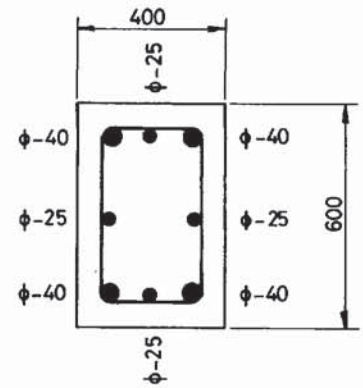


**SK 4/28** Section designed by Methods 1 and 2.

***Method 3 Interaction curve method***
(See Reference 13.)

*Reinforcement required for $M_x$ only.*

$M_x = 250\,\text{kNm}$

$d = 540\,\text{mm}$

$f_{cu} = 40\,\text{N/mm}^2$

$$K = \frac{M}{f_{cu}bd^2} = \frac{250 \times 10^6}{40 \times 400 \times 540^2} = 0.05$$

$$z = d\left[0.5 + \sqrt{\left(0.25 - \frac{K}{0.9}\right)}\right]$$

$$= d\left[0.5 + \sqrt{\left(0.25 - \frac{0.05}{0.9}\right)}\right]$$

$$= 0.94d = 508\,\text{mm}$$

$$A_{st} = \frac{M}{0.87f_y z} = \frac{250 \times 10^6}{0.87 \times 460 \times 508}$$

$$= 1230\,\text{mm}^2$$

*Reinforcement required for $M_y$ only*

$M_y = 150\,\text{kNm}$

$d = 340\,\text{mm}$

$$K = \frac{150 \times 10^6}{40 \times 600 \times 340^2} = 0.05$$

$z = 0.94d = 320\,\text{mm}$

$$A_{st} = \frac{150 \times 10^6}{0.87 \times 460 \times 320} = 1171\,\text{mm}^2$$

Area of steel required for tension only $= \dfrac{N}{0.87f_y} = 625\,\text{mm}^2$

Total reinforcement requirement $= 2 \times (1230 + 1171) + 625 = 5427\,\text{mm}^2$

Try 1 no. 32 mm dia. bar at each corner and 1 no. 25 mm dia. bar at centre of each side.
Total $A_s = 5180\,\text{mm}^2$.

$P_N$ = applied ultimate tension = 250 kN

$$\begin{aligned} P_o &= \text{capacity of section in tension alone} \\ &= A_s(0.87 f_y) \\ &= 5180 \times 0.87 \times 460 \times 10^{-3} \\ &= 2073\,\text{kN} \end{aligned}$$

$M_{ux}$ = ultimate moment in $x$ direction = 250 kNm

$M_{px}$ = ultimate moment capacity in $x$ direction when tension and $M_y$ are zero

$$\begin{aligned} A_{sx} &= 2 \text{ no. } \phi\ 32 + 1 \text{ no. } \phi\ 25 \\ &= 2099\,\text{mm}^2 \end{aligned}$$

Compression in concrete = tension in steel (see Section 1.5.1)

or $0.402 f_{cu} b x = 0.87 f_y A_s$

$$\text{or} \quad x = \frac{0.87 f_y A_s}{0.402 f_{cu} b} = \frac{0.87 \times 460 \times 2099}{0.402 \times 40 \times 400} = 130\,\text{mm} < 0.5d = 270\,\text{mm} \quad \text{OK}$$

$z = d - 0.45x = 540 - 0.45 \times 130 = 481.5\,\text{mm}$

$$\therefore \quad M_{px} = 0.87 f_y A_s z = 0.87 \times 460 \times 2099 \times 481.5 \times 10^{-6} = 404\,\text{kNm}$$

$M_{uy}$ = ultimate moment in $y$ direction = 150 kNm

$M_{py}$ = ultimate moment capacity in $y$ direction when tension and $M_x$ are zero

$A_{sy} = 2099\,\text{mm}^2$

$$x = \frac{0.87 f_y A_s}{0.402 f_{cu} h} = \frac{0.87 \times 460 \times 2099}{0.402 \times 40 \times 600} = 87\,\text{mm} < d/2 = 170\,\text{mm} \quad \text{OK}$$

$z = d - 0.45x = 340 - 0.45 \times 87 = 301\,\text{mm}$

$M_{py} = 0.87 f_y A_s z = 0.87 \times 460 \times 2099 \times 301 \times 10^{-6} = 252.6\,\text{kNm}$

Unity equation

$$\frac{P_N}{P_o} + \left(\frac{M_{ux}}{M_{px}}\right)^{1.5} + \left(\frac{M_{uy}}{M_{py}}\right)^{1.5} \le 1$$

$$\text{or} \quad \frac{250}{2073} + \left(\frac{250}{404}\right)^{1.5} + \left(\frac{150}{252.6}\right)^{1.5} = 1.065 > 1 \qquad \text{unacceptable}$$

Increase reinforcement to 8 no. 32 dia. bars instead of 4 no. 32 dia. and 4 no. 25 dia. No more checking is necessary.
Area provided by this method is 6432 mm$^2$ compared with 6992 mm$^2$ by the other two methods. This gives an 8% saving in reinforcement when the interaction formula is used. The interaction formula is not yet codified. The exponential changes from 1.5 for rectangular sections to 1.75 for square sections.

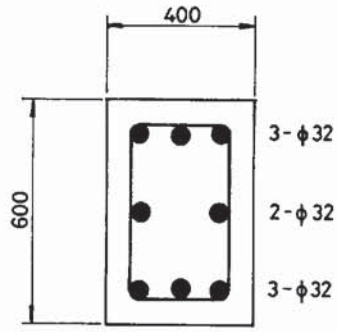


**SK 4/29** Section designed by interaction curve.

***Step 7*** ***Check shear stress***

Following ACI 318 – M83, Clause 11.3.2.3,[4] members subject to significant axial tension have a concrete shear resistance given by:

$$V_{cx} = 0.17\left(1 - 0.3\,\frac{N_u}{A_g}\right)\sqrt{f'_c}bd$$

$$= 0.17 \times \left(1 - \frac{0.3 \times 250 \times 10^3}{400 \times 600}\right) \times \sqrt{(0.8 \times 40)} \times 400 \times 540 \times 10^{-3}$$

$$= 142.8\,\text{kN}$$

Similarly,

$$V_{cy} = 0.17 \times \left(1 - \frac{0.3 \times 250 \times 10^3}{400 \times 600}\right) \times \sqrt{(32)} \times 600 \times 340 \times 10^{-3}$$

$$= 134.9\,\text{kN}$$

$$\phi\, V_{cx} = 0.85 \times 142.8 = 121.4\,\text{kN} < V_{ux} = 250\,\text{kN}$$
$$\phi\, V_{cy} = 0.85 \times 134.9 = 114.7\,\text{kN} < V_{uy} = 150\,\text{kN}$$

Shear reinforcement required for both orthogonal directions of shear.
It is assumed that concrete shear resistance will be effective in the $x$ direction only. In the $y$ direction the total shear force will be carried by shear reinforcement.

Assume $S_{vx} = S_{vy} = 100\,\text{mm}$

$$V_{sx} \geq V_{ux} - \phi\, V_{cx} = 250 - 121.4 = 128.6\,\text{kN}$$

$$A_{svx} = \frac{V_{sx}S_{vx}}{0.85 f_y d}$$

$$= \frac{128.6 \times 10^3 \times 100}{0.85 \times 400 \times 540}$$

$$= 70\,\text{mm}^2$$

$$V_{sy} \geq V_{uy} = 150\,\text{kN}$$

$$A_{svy} = \frac{V_{sy}S_{vy}}{0.85 f_y d}$$

$$= \frac{150 \times 10^3 \times 100}{0.85 \times 400 \times 340}$$

$$= 130\,\text{mm}^2$$

$A_{sv}$ is the larger of $A_{svx}$ and $A_{svy}$, i.e. $130\,\text{mm}^2$ at 100 mm spacing or $(A_{sv}/S_v) = 1.3$

Use 10 mm dia. links at 120 mm centres ($A_{sv}/S_v = 1.30$).

*Note:* ACI 318[4] restricts stress in shear reinforcement to a maximum of $400\,\text{N/mm}^2$.

Design of Shear reinforcement using BS 8110: Part 1: 1985.[1]

$$v_x = \frac{V_x}{bh'} = \frac{250 \times 10^3}{400 \times 540} = 1.14\,\text{N/mm}^2$$

$$A_{sx} = 3 \text{ no. } 32\,\text{dia. bar} = 2412\,\text{mm}^2$$

$$p_x = \frac{100A_{sx}}{bh'} = \frac{100 \times 2412}{400 \times 540} = 1.12$$

$$v_{cx} = 0.76\,\text{N/mm}^2 \qquad \text{from Fig. 11.5}$$

$$A_{sy} = 3 \text{ no. } 32\,\text{dia. bar} = 2412\,\text{mm}^2$$

$$p_y = \frac{100A_{sy}}{b'h} = \frac{100 \times 2412}{340 \times 600} = 1.18$$

$$v_{cy} = 0.82\,\text{N/mm}^2$$

$$v_y = \frac{V_y}{bd} = \frac{150 \times 10^3}{600 \times 340} = 0.74\,\text{N/mm}^2$$

Modify $v_{cx}$ and $v_{cy}$ to take into account axial tension.

$$v'_{cx} = v_{cx} + \left(\frac{0.6NV_xh}{A_cM_x}\right) \qquad \frac{V_xh}{M_x} = 0.6 < 1$$

$$= 0.76 - \left(\frac{0.6 \times 250 \times 10^3 \times 0.6}{400 \times 600}\right)$$

$$= 0.385\,\text{N/mm}^2$$

$$v'_{cy} = v_{cy} + \left(\frac{0.6NV_yb}{A_cM_y}\right) \qquad \frac{V_yb}{M_y} = 0.4 < 1$$

$$= 0.82 - \left(\frac{0.6 \times 250 \times 10^3 \times 0.4}{400 \times 600}\right)$$
$$= 0.57\,\text{N/mm}^2$$

$$v''_{cx} = \frac{v'_{cx}v_x}{v_x + v_y} = \frac{0.385 \times 1.14}{1.14 + 0.74}$$
$$= 0.23\,\text{N/mm}^2$$

$$v''_{cy} = \frac{v'_{cy}v_y}{v_x + v_y} = \frac{0.57 \times 0.74}{1.14 + 0.74}$$
$$= 0.22\,\text{N/mm}^2$$

$$V'_{cx} = v''_{cx}bh' = 0.23 \times 400 \times 540 \times 10^{-3} = 49.7\,\text{kN}$$
$$V'_{cy} = v''_{cy}b'h = 0.22 \times 340 \times 600 \times 10^{-3} = 44.9\,\text{kN}$$

Assume 10 mm dia. bar ($f_y = 460\,\text{N/mm}^2$) used as links at a spacing of 150 mm. Area of two legs is 157 mm$^2$.

$$V_{sx} = \frac{0.87 f_{yv} A_{sh} h'}{S}$$
$$= \frac{0.87 \times 460 \times 157 \times 540 \times 10^{-3}}{150} = 226.2\,\text{kN}$$

$$V_{sy} = \frac{0.87 f_{yv} A_{sb} b'}{S}$$
$$= \frac{0.87 \times 460 \times 157 \times 340 \times 10^{-3}}{150} = 142.4\,\text{kN}$$

Check: $V_{sx} \geq V_x - V'_{cx} = 250 - 49.7 = 200.3\,\text{kN} < 226.2\,\text{kN}$ OK
$V_{sy} \geq V_y - V'_{cy} = 150 - 44.9 = 105.1\,\text{kN} < 142.4\,\text{kN}$ OK

***Note:*** Slightly less shear reinforcement required when designed to BS 8110: Part 1: 1985.[1]

***Step 8*** ***Minimum reinforcement***
Reinforcement provided = 6432 mm$^2$ = 2.68% > 0.4%

***Step 9*** ***Maximum reinforcement***
Maximum reinforcement = 6% not exceeded.

***Step 10*** ***Containment of reinforcement***
All reinforcement in tension. Containment rules do not apply.
Rules for minimum shear reinforcement in beams, as in Section 2.3 Step 13, should apply.

$$\text{Minimum } \frac{A_{sv}}{S_v} = \frac{0.4b}{0.87 f_{yv}}$$
$$= \frac{0.4 \times 600}{0.87 \times 460} = 0.6 < \frac{157}{150} = 1.04 \quad \text{OK}$$

***Step 11*** ***Check spacing of bars for crack width***
See Section 2.3, Step 24.

MSA = 20 mm

Dia. of bar = 32 mm

Minimum clear distance between bars = 112 mm > 32 mm

Maximum clear distance between bars = 212 mm with 3 no. 32 dia. on the long side

$$\text{Service stress, } f_s = \frac{5}{8} f_y \quad \text{assumed}$$

$$= \frac{5}{8} \times 460 = 287.5\,\text{N/mm}^2$$

$$\text{Maximum allowable clear spacing} = \frac{47000}{287.5} = 163\,\text{mm} < 212\,\text{mm} \quad \text{provided}$$

This means that to reduce the probability of the crack width exceeding 0.3 mm, 4 bars should be used on the long face, i.e. 2 no. 32 dia. and 2 no. 25 dia. (total 6 no. 32 dia. and 4 no. 25 dia. in the member).

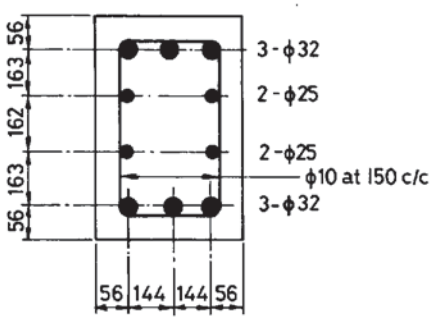


**SK 4/30** Final designed section.

# Chapter 5
# Design of Corbels and Nibs

## 5.0 NOTATION

| | |
|---|---|
| $a_v$ | Distance from centre of load to nearest face of column for a corbel |
| $a_v$ | Distance from free edge of nib to nearest link in beam |
| $A_s$ | Area of steel reinforcement in tension to resist bending |
| $A_{sh}$ | Area of horizontal steel reinforcement to resist shear in corbel |
| $b$ | Width of corbel |
| $d$ | Effective depth from bottom of corbel to centre of tensile reinforcement |
| $d_b$ | Depth of corbel at edge of loaded area |
| $f_s$ | Tensile stress in steel |
| $f_y$ | Characteristic yield strength of steel |
| $f_{cu}$ | Characteristic cube strength of concrete at 28 days |
| $F_c$ | Concrete strut force in compression |
| $F_t$ | Steel tensile force |
| $F_{bt}$ | Tensile force in reinforcement at start of a bend |
| $h$ | Overall depth of corbel |
| $M$ | Applied moment on a section |
| $p$ | Percentage of tensile reinforcement |
| $r$ | Internal radius of a bend in a bar |
| $S_h$ | Spacing of horizontal links in a corbel |
| $T$ | Tension force applied to corbel along with vertical load |
| $v$ | Shear stress in concrete ($N/mm^2$) |
| $v_c$ | Design shear stress in concrete ($N/mm^2$) |
| $v_c'$ | Modified design shear stress to account for $a_v$ |
| $V$ | Vertical load on corbel |
| $x$ | Distance of neutral axis from bottom of corbel |
| $z$ | Depth of lever arm |
| $\beta$ | Angle of inclination to horizontal of concrete strut in a corbel |
| $\varepsilon_s$ | Strain in steel reinforcement |
| $\phi$ | Diameter of reinforcing bar or equivalent diameter of a group of bars |

## 5.1 LOAD COMBINATIONS

### 5.1.1 General rules

See Section 2.2.1.